Date: Wednesday, 9/13/2006 4:24:39 PM
User: Kim Johnston

Process Sheet

Customer : CU-DAR001 Dart Helicopters Services
Job Number : 28511
Estimate Number : 12433
P.O. Number : N/A
This Issue : 9/13/2006 **S.O. No.** : N/A
Prsht Rev. : NC
First Issue : N/A **Type** : LARGE FAB ASSY
Previous Run : 28510
Written By :
Checked & Approved By : 06 09 14
Comment : Est Rev:C Re-Format 02-08-30 KJ

Drawing Name : HELI-UTILITY BASKET RH
Part Number : D205541044
Drawing Number : IIN D205-541 REV F
Project Number : N/A
Drawing Revision : F
Material : N/A
Due Date : 10/12/2006 **Qty:** 1 **Um:** Each

Additional Product

Job Number:

Seq. #:	Machine Or Operation:	Description :
1.0	28511A	350/212/130 BASKET LID

Comment: Sub-Component 350/212/130 BASKET LID
D2512 B 28511A

2.0	28511B	212 BASKET BASE ASS'Y RH

Comment: Sub-Component 212 BASKET BASE ASS'Y LH
D3053-042

3.0	DC	DOCUMENT CONTROL

Comment: Photocopy bluefile & type labels per PPPD205-541-044 CHG002 06/09/20 KJ (1)

4.0	D2022101	Spacer

Comment: Qty.: 2.0000 Each(s)/Unit Total : 2.0000 Each(s)
Spacer
Batch: B25815

5.0	D2258300	Placard

Comment: Qty.: 1.0000 Each(s)/Unit Total : 1.0000 Each(s)
Placard
Batch: B28072

Dart Aerospace Ltd

W/O:		WORK ORDER CHANGES					
DATE	STEP	PROCEDURE CHANGE	By	Date	Qty	Approval Chief Eng / Prod Mgr	Approval QC Inspector

Part No: _____ **PAR #:** _____ **Fault Category:** _____ **NCR:** Yes No **DQA:** _____ **Date:** _____

QA: N/C Closed: _____ **Date:** _____

NCR:		WORK ORDER NON-CONFORMANCE (NCR)						
DATE	STEP	Description of NC Section A	Corrective Action Section B			Verification Section C	Approval Chief Eng	Approval QC Inspector
			Initial Chief Eng	Action Description Chief Eng	Sign & Date			

NOTE: Date & initial all entries

Date: Wednesday, 9/13/2006 4:24:39 PM
User: Kim Johnston

Process Sheet

Customer: CU-DAR001 Dart Helicopters Services **Drawing Name:** HELI-UTILITY BASKET RH

Job Number: 28511 **Part Number:** D205541044

Job Number:

Seq. #:	Machine Or Operation:	Description :
6.0	D2332041	Lid Prop Assembly 6.69"
	Comment: Qty.: 1.0000 Each(s)/Unit Total : 1.0000 Each(s) Lid Prop Assembly 6.69" Batch: B26880	
7.0	D2530	Handle Weldment
	Comment: Qty.: 1.0000 Each(s)/Unit Total : 1.0000 Each(s) Handle Weldment Batch: B28297	
8.0	D2535	Spring
	Comment: Qty.: 2.0000 Each(s)/Unit Total : 2.0000 Each(s) Spring Batch: B23087	
9.0	D2537	Bushing
	Comment: Qty.: 2.0000 Each(s)/Unit Total : 2.0000 Each(s) Bushing Batch: ~~B28249~~ B28244	
10.0	D2931	Bumper
	Comment: Qty.: 2.0000 Each(s)/Unit Total : 2.0000 Each(s) Bumper Batch: BQ1139	
11.0	AN316A	Bolt
	Comment: Qty.: 2.0000 Each(s)/Unit Total : 2.0000 Each(s) Bolt Batch: M101884	
12.0	AN47A	Bolt
	Comment: Qty.: 2.0000 Each(s)/Unit Total : 2.0000 Each(s) Bolt Batch: M10D327	

Form: rprocess

Dart Aerospace Ltd

W/O:		WORK ORDER CHANGES					
DATE	STEP	PROCEDURE CHANGE	By	Date	Qty	Approval Chief Eng / Prod Mgr	Approval QC Inspector

Part No: _____ **PAR #:** _____ **Fault Category:** _____ **NCR:** Yes No **DQA:** _____ **Date:** _____

QA: N/C Closed: _____ **Date:** _____

NCR:		WORK ORDER NON-CONFORMANCE (NCR)						
DATE	STEP	Description of NC Section A	Corrective Action Section B			Verification Section C	Approval Chief Eng	Approval QC Inspector
			Initial Chief Eng	Action Description Chief Eng	Sign & Date			

NOTE: Date & initial all entries

Date: Wednesday, 9/13/2006 4:24:39 PM
User: Kim Johnston

Process Sheet

Customer: CU-DAR001 Dart Helicopters Services
Drawing Name: HELI-UTILITY BASKET RH

Job Number: 28511
Part Number: D205541044

Job Number:

Seq. #:	Machine Or Operation:	Description :
13.0	AN422A	Bolt
	Comment: Qty.: 1.0000 Each(s)/Unit Total : 1.0000 Each(s) Bolt Batch: M 17288	
14.0	AN424A	Bolt
	Comment: Qty.: 1.0000 Each(s)/Unit Total : 1.0000 Each(s) Bolt Batch: ~~M 17295~~ M17204	
15.0	AN517A	Bolt
	Comment: Qty.: 4.0000 Each(s)/Unit Total : 4.0000 Each(s) Bolt Batch: M101537	
16.0	AN960JD416	Washer
	Comment: Qty.: 2.0000 Each(s)/Unit Total : 2.0000 Each(s) Washer Batch: M19185	
17.0	AN960JD416L	Washer
	Comment: Qty.: 2.0000 Each(s)/Unit Total : 2.0000 Each(s) Washer Batch: M101237	
18.0	AN960JD516	Washer
	Comment: Qty.: 4.0000 Each(s)/Unit Total : 4.0000 Each(s) Washer Batch: M101369	
19.0	AN960JD8	Washer
	Comment: Qty.: 2.0000 Each(s)/Unit Total : 2.0000 Each(s) Washer Batch: M11989	

Form: rprocess

Dart Aerospace Ltd

W/O:		WORK ORDER CHANGES					
DATE	STEP	PROCEDURE CHANGE	By	Date	Qty	Approval Chief Eng / Prod Mgr	Approval QC Inspector

Part No: _____ **PAR #:** _____ **Fault Category:** _____ **NCR:** Yes No **DQA:** _____ **Date:** _____

QA: N/C Closed: _____ **Date:** _____

NCR:		WORK ORDER NON-CONFORMANCE (NCR)						
DATE	STEP	Description of NC Section A	Corrective Action Section B			Verification Section C	Approval Chief Eng	Approval QC Inspector
			Initial Chief Eng	Action Description Chief Eng	Sign & Date			

NOTE: Date & initial all entries

Date: Wednesday, 9/13/2006 4:24:40 PM
User: Kim Johnston

Process Sheet

Customer: CU-DAR001 Dart Helicopters Services
Drawing Name: HELI-UTILITY BASKET RH

Job Number: 28511
Part Number: D205541044

Job Number:

Seq. #:	Machine Or Operation:	Description :
20.0	AN9704	Washer

Comment: Qty.: 4.0000 Each(s)/Unit Total : 4.0000 Each(s)
Washer
Batch: ~~[illegible]~~ M100151

21.0	MS21042L3	Nut

Comment: Qty.: 2.0000 Each(s)/Unit Total : 2.0000 Each(s)
Nut
Batch: ~~[illegible]~~ M101398

22.0	MS21042L4	Nut

Comment: Qty.: 4.0000 Each(s)/Unit Total : 4.0000 Each(s)
Nut
Batch: ~~[illegible]~~ M19099

23.0	MS21042L5	Nut

Comment: Qty.: 4.0000 Each(s)/Unit Total : 4.0000 Each(s)
Nut
Batch: M101648

24.0	MS20600AD4W3	Cherry Rivets

Comment: Qty.: 2.0000 Each(s)/Unit Total : 2.0000 Each(s)
Cherry Rivets
Batch: M101415 SAD 06/10/08 1

25.0	SMALL FAB 1	SMALL & MEDIUM FAB RESOURCE 1

Comment: SMALL & MEDIUM FAB RESOURCE 1
Assemble as per Dwg. SAD 06/10/08 1

26.0	QC5	INSPECT WORK TO CURRENT STEP

Comment: INSPECT WORK TO CURRENT STEP SB 06/10/10 1

Form: rprocess

Dart Aerospace Ltd

W/O:		WORK ORDER CHANGES					
DATE	STEP	PROCEDURE CHANGE	By	Date	Qty	Approval Chief Eng / Prod Mgr	Approval QC Inspector

Part No: _____ **PAR #:** _____ **Fault Category:** _____ **NCR:** Yes No **DQA:** _____ **Date:** _____

QA: N/C Closed: _____ **Date:** _____

NCR:		WORK ORDER NON-CONFORMANCE (NCR)						
DATE	STEP	Description of NC Section A	Corrective Action Section B			Verification Section C	Approval Chief Eng	Approval QC Inspector
			Initial Chief Eng	Action Description Chief Eng	Sign & Date			

NOTE: Date & initial all entries

Date: Wednesday, 9/13/2006 4:24:40 PM
User: Kim Johnston

Process Sheet

Customer: CU-DAR001 Dart Helicopters Services
Drawing Name: HELI-UTILITY BASKET RH

Job Number: 28511
Part Number: D205541044

Job Number:

Seq. #:	Machine Or Operation:	Description :
27.0	PACKAGING 1	PACKAGING RESOURCE #1

Comment: PACKAGING RESOURCE #1
Pick Packing Kit

28.0	D21991	Struts, 19"

Comment: Qty.: 1.0000 Each(s)/Unit Total : 1.0000 Each(s)
Struts, 19"
Batch: B28071

29.0	D219923	Strut

Comment: Qty.: 1.0000 Each(s)/Unit Total : 1.0000 Each(s)
Strut
Batch: B12793 ~~B14016~~ ~~B10730~~

30.0	D219925	Strut

Comment: Qty.: 1.0000 Each(s)/Unit Total : 1.0000 Each(s)
Strut
Batch: B11407 ~~B10731~~ ~~B12744~~

31.0	D2498	Mounting Bracket

Comment: Qty.: 1.0000 Each(s)/Unit Total : 1.0000 Each(s)
Mounting Bracket
Batch: B27683

32.0	D2499	Mounting Bracket

Comment: Qty.: 1.0000 Each(s)/Unit Total : 1.0000 Each(s)
Mounting Bracket
Batch: B27507

33.0	D2515	Bushing

Comment: Qty.: 2.0000 Each(s)/Unit Total : 2.0000 Each(s)
Bushing
Batch: B18029

Form: rprocess

Dart Aerospace Ltd

W/O:		WORK ORDER CHANGES					
DATE	STEP	PROCEDURE CHANGE	By	Date	Qty	Approval Chief Eng / Prod Mgr	Approval QC Inspector

Part No: _____ **PAR #:** _____ **Fault Category:** _____ **NCR:** Yes No **DQA:** _____ **Date:** _____

QA: N/C Closed: _____ **Date:** _____

NCR:		WORK ORDER NON-CONFORMANCE (NCR)						
DATE	STEP	Description of NC Section A	Corrective Action Section B			Verification Section C	Approval Chief Eng	Approval QC Inspector
			Initial Chief Eng	Action Description Chief Eng	Sign & Date			

NOTE: Date & initial all entries

Date: Wednesday, 9/13/2006 4:24:40 PM
User: Kim Johnston

Process Sheet

Customer: CU-DAR001 Dart Helicopters Services **Drawing Name:** HELI-UTILITY BASKET RH

Job Number: 28511 **Part Number:** D205541044

Job Number:

Seq. #:	Machine Or Operation:	Description :
34.0	D30521	Mounting Lug
	Comment: Qty.: 1.0000 Each(s)/Unit Total : 1.0000 Each(s) Mounting Lug Batch: B28522	
35.0	AN47A	Bolt
	Comment: Qty.: 2.0000 Each(s)/Unit Total : 2.0000 Each(s) Bolt Batch: M100327	
36.0	AN412A	Bolt
	Comment: Qty.: 3.0000 Each(s)/Unit Total : 3.0000 Each(s) Bolt Batch: M101390	
37.0	AN413A	Bolt
	Comment: Qty.: 9.0000 Each(s)/Unit Total : 9.0000 Each(s) Bolt Batch: M101938	
38.0	AN414A	Bolt
	Comment: Qty.: 2.0000 Each(s)/Unit Total : 2.0000 Each(s) Bolt Batch: M100188	
39.0	AN57A	Bolt
	Comment: Qty.: 1.0000 Each(s)/Unit Total : 1.0000 Each(s) Bolt Batch: M102190	
40.0	AN513A	Bolt
	Comment: Qty.: 1.0000 Each(s)/Unit Total : 1.0000 Each(s) Bolt Batch: M15928	

Form: rprocess

Dart Aerospace Ltd

W/O:		WORK ORDER CHANGES					
DATE	STEP	PROCEDURE CHANGE	By	Date	Qty	Approval Chief Eng / Prod Mgr	Approval QC Inspector

Part No: _____ **PAR #:** _____ **Fault Category:** _____ **NCR:** Yes (No) **DQA:** [illegible] **Date:** 06/10/11

QA: N/C Closed: _____ **Date:** _____

NCR:		WORK ORDER NON-CONFORMANCE (NCR)						
DATE	STEP	Description of NC Section A	Corrective Action Section B			Verification Section C	Approval Chief Eng	Approval QC Inspector
			Initial Chief Eng	Action Description Chief Eng	Sign & Date			

NOTE: Date & initial all entries

Date: Wednesday, 9/13/2006 4:24:40 PM
User: Kim Johnston

Process Sheet

Customer: CU-DAR001 Dart Helicopters Services **Drawing Name:** HELI-UTILITY BASKET RH

Job Number: 28511 **Part Number:** D205541044

Job Number:

Seq. #:	Machine Or Operation:	Description :
41.0	AN960JD416	Washer

Comment: Qty.: 29.0000 Each(s)/Unit Total : 29.0000 Each(s)
Washer M19185

42.0	AN960JD516	Washer

Comment: Qty.: 3.0000 Each(s)/Unit Total : 3.0000 Each(s)
Washer
Batch: M16369

43.0	MS21042L4	Nut

Comment: Qty.: 16.0000 Each(s)/Unit Total : 16.0000 Each(s)
Nut
Batch: M19699

44.0	MS21042L5	Nut

Comment: Qty.: 2.0000 Each(s)/Unit Total : 2.0000 Each(s)
Nut
Batch: M17694 . 06/10/11 (1)

45.0	QC4	INSPECT 100% KITS FOR COMPLETENESS

Comment: INSPECT 100% KITS FOR COMPLETENESS 06/10/11 (1)

46.0	PACKAGING 1	PACKAGING RESOURCE #1

Comment: PACKAGING RESOURCE #1
Identify and pack for shipping as per PPP D205-541-044
Location:
PPP Rev: E 06/10/11 (1)

47.0	QC21	FINAL INSPECTION/W/O RELEASE

Comment: FINAL INSPECTION/W/O RELEASE 06/10/11 (1)

Job Completion 06.10.11

Form: rprocess

Dart Aerospace Ltd

W/O:		WORK ORDER CHANGES					
DATE	STEP	PROCEDURE CHANGE	By	Date	Qty	Approval Chief Eng / Prod Mgr	Approval QC Inspector

Part No: _____ **PAR #:** _____ **Fault Category:** _____ **NCR:** Yes No **DQA:** _____ **Date:** _____

QA: N/C Closed: _____ **Date:** _____

NCR:		WORK ORDER NON-CONFORMANCE (NCR)						
DATE	STEP	Description of NC Section A	Corrective Action Section B			Verification Section C	Approval Chief Eng	Approval QC Inspector
			Initial Chief Eng	Action Description Chief Eng	Sign & Date			

NOTE: Date & initial all entries

2. GENERAL NOTES

COMPATIBILITY
Compatibility of this installation with the aircraft is the **responsibility of the installer.** Ensure that this installation does not conflict with a previous modification.

CONTINUING AIRWORTHINESS
This installation should be maintained in accordance with the Instructions for Continued Airworthiness **ICA-D205-541**.

3. INSTALLATION PROCEDURE

1. It required, install D2498 (STA 84.29), D2499 (STA 155.06), and D3052-1 (STA 129.00) per Figure 5.
2. Locate the D205-541-043/-044 ***Utility-Basket*** *TM* as shown in Figure 1.
3. Attach the Basket to the A/C hardpoints at STA 84.29, STA 129.00, STA 155.06 as shown in Figures 2, 3, and 4 respectively.
4. Torque AN4 bolts 50-70 in-lbs (5.6-7.9 N-m). Torque AN5 bolts 100-140 in-lbs (11.3-15.8 N-m).
5. If the D3052-1 mounting lug & D2199-1 strut are not installed (at STA 129), the D2258-300 placard on the lid of the basket should be replaced with the D2258-220 placard. The D2258-220 placard can be purchased from Dart.

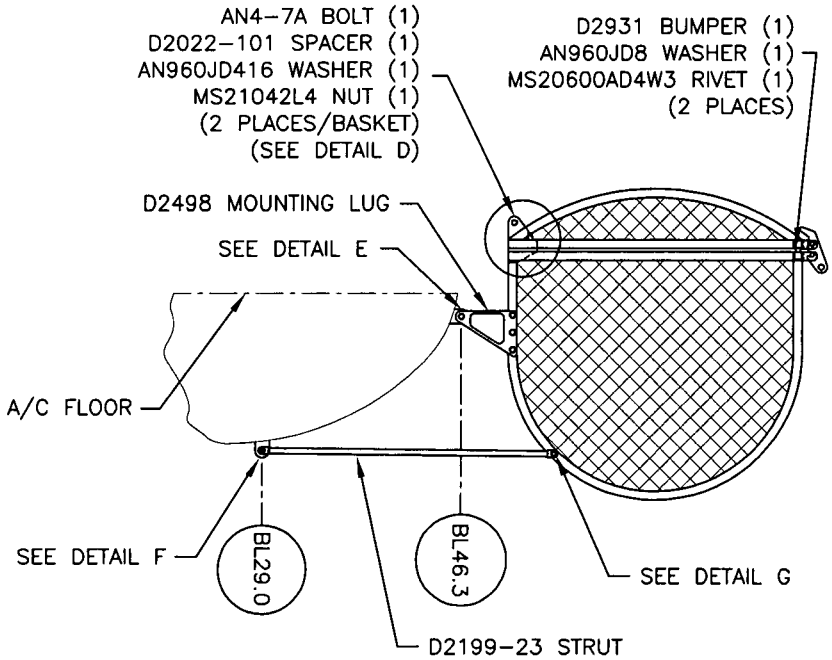

Figure 2 - Section A-A Looking Fwd at STA 84.29
(D205-541-044 Shown. D205-541-043 Opposite)

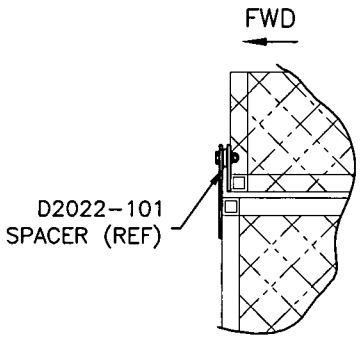

DETAIL D
HINGE DETAIL:
SIDE VIEW, LOOKING OUTBOARD.
OTHER END OPPOSITE

SHOP COPY
RETURN TO
ENGINEERING
UNCONTROLLED COPY
SUBJECT TO AMENDMENT
WITHOUT NOTICE
WORK ORDER
NO. 28511

• COPYRIGHT © 1993 BY DART AEROSPACE LTD •
THIS DOCUMENT IS PRIVATE AND CONFIDENTIAL AND IS SUPPLIED ON THE EXPRESS CONDITION THAT IT IS NOT TO BE USED FOR ANY PURPOSE OR COPIED OR COMMUNICATED TO ANY OTHER PERSON WITHOUT WRITTEN PERMISSION FROM DART AEROSPACE LTD.

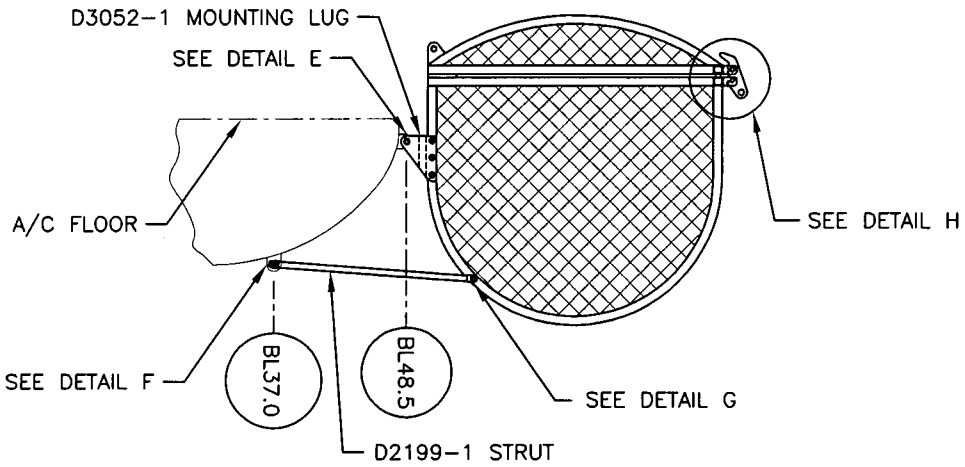

Figure 3 – Section B-B Looking Fwd at STA 129.00
(D205-541-044 Shown. D205-541-043 Opposite)

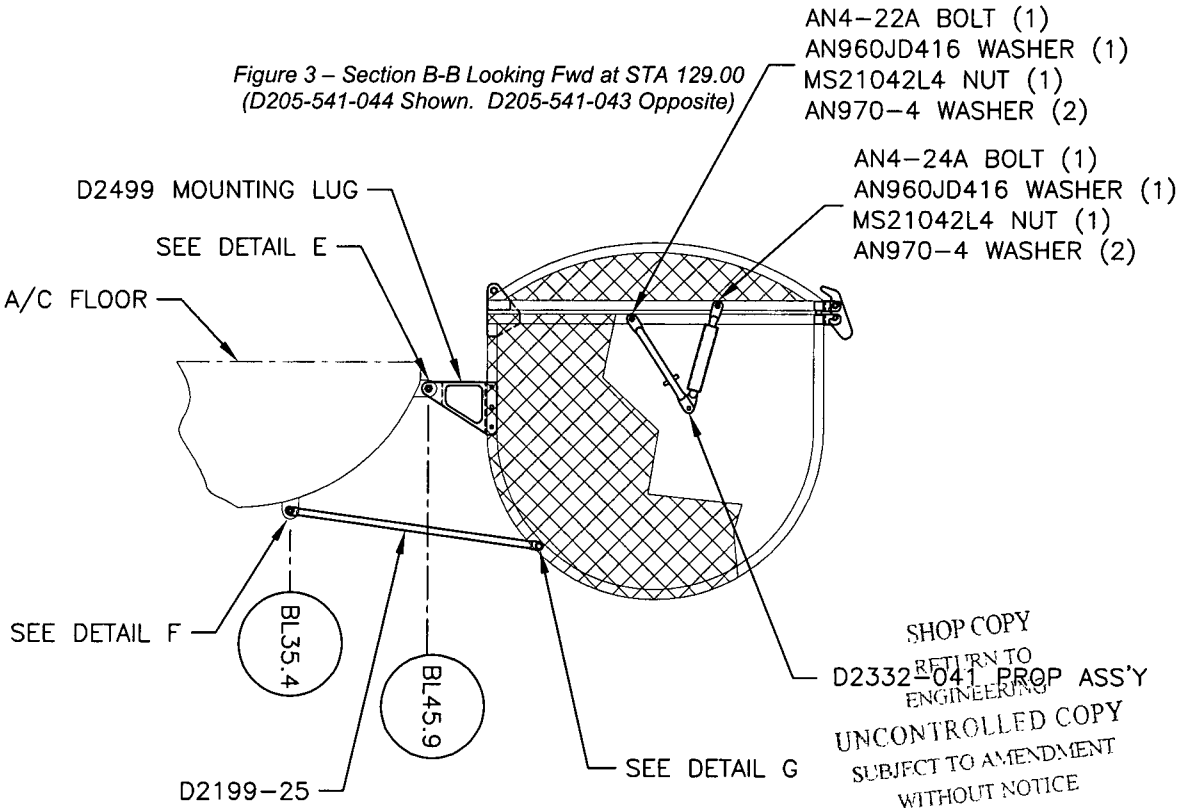

Figure 4 – Section C-C Looking Fwd at STA 155.06
(D205-541-044 Shown. D205-541-043 Opposite)

SHOP COPY
RETURN TO ENGINEERING
UNCONTROLLED COPY
SUBJECT TO AMENDMENT WITHOUT NOTICE
WORK ORDER NO. 28571

• COPYRIGHT © 1993 BY DART AEROSPACE LTD •
THIS DOCUMENT IS PRIVATE AND CONFIDENTIAL AND IS SUPPLIED ON THE EXPRESS CONDITION THAT IT IS NOT TO BE USED FOR ANY PURPOSE OR COPIED OR COMMUNICATED TO ANY OTHER PERSON WITHOUT WRITTEN PERMISSION FROM DART AEROSPACE LTD.

Date: Wednesday, 9/13/2006 4:25:13 PM
User: Kim Johnston

Process Sheet

Customer : CU-DAR001 Dart Helicopters Services
Job Number : 28511B
Estimate Number : 11543
P.O. Number : N/A
This Issue : 9/13/2006 **S.O. No.** : N/A
Prsht Rev. : NC
First Issue : N/A **Type** : LARGE FAB ASSY
Previous Run : 28510B
Written By :
Checked & Approved By : 06 09 14
Comment : Est. C 02.09.04 M304EX0.75-16F was M750-16FXS-S/S K J/RF

Drawing Name : 212 BASKET BASE ASS'Y RH
Part Number : D3053042
Drawing Number : D3053 REV A
Project Number : N/A
Drawing Revision : A
Material : N/A
Due Date : 10/12/2006 **Qty:** 1 **Um:** Each

Additional Product

Job Number:

Seq. #:	Machine Or Operation:	Description :
1.0	M304TS0750W065	304 SQ Tube.75x.75x.065W

Comment: Qty.: 45.5000 f(s)/Unit Total : 45.5000 f(s)
304 SQ Tube.75x.75x.065W
Cut Rib from 3/4" x 3/4" x 0.063 wall 304/316 SS tubing. Batch: M102175 06/09/27

2.0	D31661	Basket Hoop

Comment: Qty.: 5.0000 Each(s)/Unit Total : 5.0000 Each(s)
Basket Hoop
Qty. 5 D3166-1
Batch: B28524 06/09/27

3.0	LARGE FAB 1	LARGE FABRICATION RESOURCE 1

Comment: LARGE FABRICATION RESOURCE 1
Cut 5 D2235-3 FROM D3166-1

Drill holes in D3053-3 as per Dwg D3053 06/09/27

4.0	D23273	Spacer Bushing

Comment: Qty.: 2.0000 Each(s)/Unit Total : 2.0000 Each(s)
Spacer Bushing
Pick:

Qty	Part Number	Description	Batch
2	D2327-3	Bushing	B28073

06/09/27

Dart Aerospace Ltd

W/O:		WORK ORDER CHANGES					
DATE	STEP	PROCEDURE CHANGE	By	Date	Qty	Approval Chief Eng / Prod Mgr	Approval QC Inspector

Part No: _____ **PAR #:** _____ **Fault Category:** _____ **NCR:** Yes No **DQA:** _____ **Date:** _____

QA: N/C Closed: _____ **Date:** _____

NCR:		WORK ORDER NON-CONFORMANCE (NCR)						
DATE	STEP	Description of NC Section A	Corrective Action Section B			Verification Section C	Approval Chief Eng	Approval QC Inspector
			Initial Chief Eng	Action Description Chief Eng	Sign & Date			

NOTE: Date & initial all entries

Date: Wednesday, 9/13/2006 4:25:13 PM
User: Kim Johnston

Process Sheet

Customer: CU-DAR001 Dart Helicopters Services **Drawing Name:** 212 BASKET BASE ASS'Y RH

Job Number: 28511B **Part Number:** D3053042

Job Number:

Seq. #:	Machine Or Operation:	Description :
5.0	D22323	Basket Hinge

Comment: Qty.: 2.0000 Each(s)/Unit Total : 2.0000 Each(s)
Basket Hinge
Pick:

Qty	Part Number	Description	Batch
2	D2232-3	Hinge plate	B24527

AD 06/09/27

6.0	D2581	Mounting Bracket

Comment: Qty.: 2.0000 Each(s)/Unit Total : 2.0000 Each(s)
Mounting Bracket
Pick:

Qty	Part Number	Description	Batch
2	D2581	Mounting Bracket	B27587

AD 06/09/27

7.0	M304EX07516F	Expanded Metal Flat Stai

Comment: Qty.: 50.4000 sf(s)/Unit Total : 50.4000 sf(s)
Expanded Metal Flat Stai
Pick:

Qty	Part Number	Description	Batch
48sq.ft	M304EX0.75-16F	Expanded Metal	M102126 ~~M101775~~

AD 06/09/27

8.0	LARGE FAB 1	LARGE FABRICATION RESOURCE 1

Comment: LARGE FABRICATION RESOURCE 1
Remove all markings from material
Drill holes in three D2235-3 ribs as per Dwg D3053 using Jig DT8365

Weld as per Dwg D3053 using Welding Table and corner Jig Deburr as required

****Ensure ribs are positonned for LH****

AD 06/09/28

9.0	QC9/6	DDIMENSIONAL & WELDING INSPECTION

Comment: DDIMENSIONAL & WELDING INSPECTION

AD 06-09-23 (1)

Form: rprocess

Dart Aerospace Ltd

W/O:		WORK ORDER CHANGES					
DATE	STEP	PROCEDURE CHANGE	By	Date	Qty	Approval Chief Eng / Prod Mgr	Approval QC Inspector

Part No: _____ **PAR #:** _____ **Fault Category:** _____ **NCR:** Yes (No) **DQA:** [illegible] **Date:** 06/10/14

QA: N/C Closed: _____ **Date:** _____

NCR:		WORK ORDER NON-CONFORMANCE (NCR)						
DATE	STEP	Description of NC Section A	Corrective Action Section B			Verification Section C	Approval Chief Eng	Approval QC Inspector
			Initial Chief Eng	Action Description Chief Eng	Sign & Date			

NOTE: Date & initial all entries

Date: Wednesday, 9/13/2006 4:25:14 PM
User: Kim Johnston

Process Sheet

Customer: CU-DAR001 Dart Helicopters Services
Drawing Name: 212 BASKET BASE ASS'Y RH

Job Number: 28511B
Part Number: D3053042

Job Number:

Seq. #:	Machine Or Operation:	Description :
10.0	DC	DOCUMENT CONTROL
	Comment: DOCUMENT CONTROL Take Traveller D205-541-043 to KP	
11.0	POWDER COATING	POWDER COATING
	Comment: POWDER COATING Powder Coat White Gloss (Ref: 4.3.5.2) as per QSI 005 4.3	06/10/03 X 1
12.0	QC3	INSPECT POWDER COAT/CHEMICAL CONVERSION
	Comment: INSPECT POWDER COAT/CHEMICAL CONVERSION	SAM 06:10-08
13.0	PACKAGING 1	PACKAGING RESOURCE #1
	Comment: PACKAGING RESOURCE #1 Identify and Stock Location: GA	SB 06/10/08 1
14.0	QC21	FINAL INSPECTION/W/O RELEASE
	Comment: FINAL INSPECTION/W/O RELEASE	06/10/11 1

Job Completion

U 06.10-11

Form: rprocess

Dart Aerospace Ltd

W/O:		WORK ORDER CHANGES					
DATE	STEP	PROCEDURE CHANGE	By	Date	Qty	Approval Chief Eng / Prod Mgr	Approval QC Inspector

Part No: _____ **PAR #:** _____ **Fault Category:** _____ **NCR:** Yes No **DQA:** _____ **Date:** _____

QA: N/C Closed: _____ **Date:** _____

NCR:		WORK ORDER NON-CONFORMANCE (NCR)						
DATE	STEP	Description of NC Section A	Corrective Action Section B			Verification Section C	Approval Chief Eng	Approval QC Inspector
			Initial Chief Eng	Action Description Chief Eng	Sign & Date			

NOTE: Date & initial all entries

DESIGN	DRAWN BY	DART AEROSPACE LTD HAWKESBURY, ONTARIO, CANADA	
CHECKED	APPROVED	DRAWING NO. D3053	REV. A SHEET 1 OF 3
DATE 01.11.01		TITLE BASKET BASE ASSEMBLY (212)	SCALE NTS
A	01.11.01	NEW ISSUE	

DART

ISSUED COPY

RELEASED 01.12.20

PARTS LIST FOR D3053-041/D3053-042 BASKET BASE ASSEMBLY

PART NO	QUANTITY	LENGTH A	LENGTH B	DESCRIPTION
D3053-1	2	——	96.00	RIB
D3053-3	2	——	25.50	RIB
D3053-5	6	23.73	——	RIB
D3053-7	3	25.31	——	RIB
D3053-9	3	19.48	——	RIB
D2327-3	2	N/A	N/A	BUSHING
D2581	2	N/A	N/A	MOUNTING BRKT
D2232-3	2	N/A	N/A	HINGE PLATE
D2235-3	5	N/A	N/A	RIB

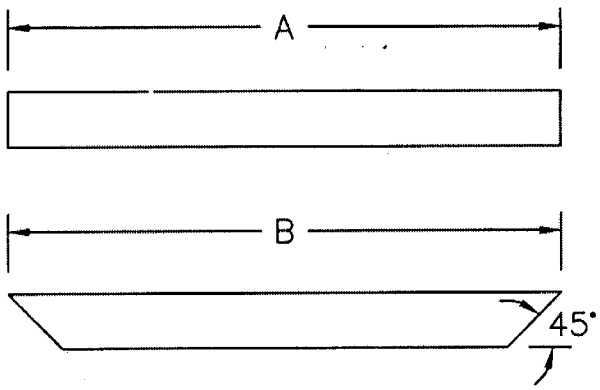

SHOP COPY
RETURN TO
ENGINEERING
UNCONTROLLED COPY
SUBJECT TO AMENDMENT
WITHOUT NOTICE
WORK ORDER
NO. 28511B

NOTES:
1) CUT LENGTH/SHAPE PER DIAGRAM AND PARTS LIST
2) FRAME MATERIAL: AISI 304/316 SS, 3/4 X 3/4 X 0.060 WALL SQUARE TUBING
3) MESH MATERIAL: 3/4-16F EXPANDED SS
4) WELD PER DART QSI 004
5) FINISH: POWDER COAT ENTIRE ASSEMBLY WHITE (4.3.5.2) PER DART QSI 005 4.3
6) TOLERANCES ARE PER DART QSI 018 UNLESS OTHERWISE NOTED
7) ALL DIMENSIONS ARE IN INCHES

Copyright © 2001 by DART AEROSPACE LTD
THIS DOCUMENT IS PRIVATE AND CONFIDENTIAL AND IS SUPPLIED ON THE EXPRESS CONDITION THAT IT IS NOT TO BE USED FOR ANY PURPOSE OR COPIED OR COMMUNICATED TO ANY OTHER PERSON WITHOUT WRITTEN PERMISSION FROM DART AEROSPACE LTD.

DESIGN	DRAWN BY	DART AEROSPACE LTD HAWKESBURY, ONTARIO, CANADA	
RF	RF		
CHECKED	APPROVED	DRAWING NO.	REV. A
		D3053	SHEET 2 OF 3
DATE		TITLE	SCALE
01.11.01		BASKET BASE ASSEMBLY (212)	1:20

RELEASED
01.12.20

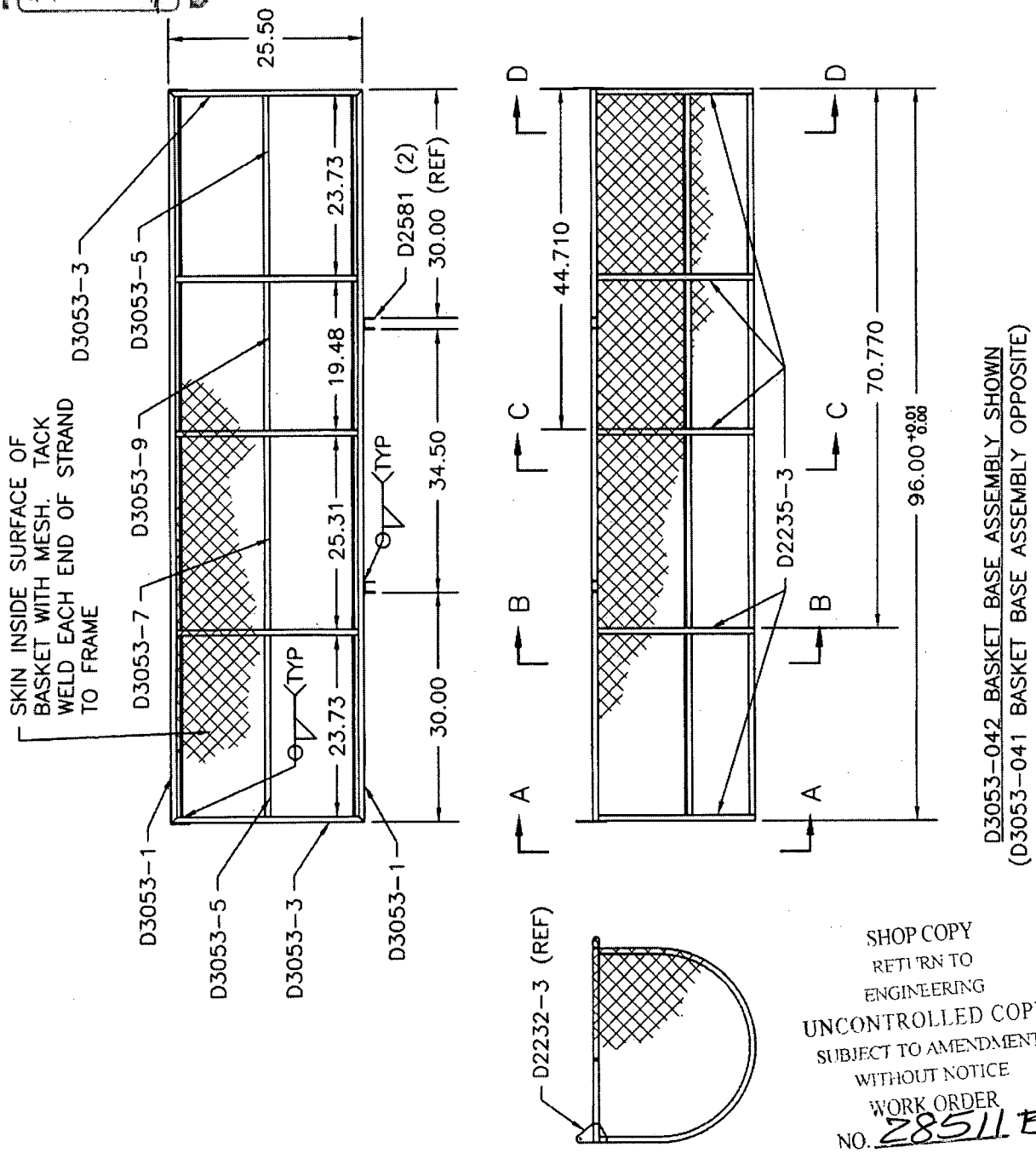

SHOP COPY
RETURN TO
ENGINEERING
UNCONTROLLED COPY
SUBJECT TO AMENDMENT
WITHOUT NOTICE
WORK ORDER
NO. 28511 B

Copyright © 2001 by DART AEROSPACE LTD
THIS DOCUMENT IS PRIVATE AND CONFIDENTIAL AND IS SUPPLIED ON THE EXPRESS CONDITION THAT IT IS NOT TO BE USED FOR ANY PURPOSE OR COPIED OR COMMUNICATED TO ANY OTHER PERSON WITHOUT WRITTEN PERMISSION FROM DART AEROSPACE LTD.

DESIGN	DRAWN BY	DART AEROSPACE LTD HAWKESBURY, ONTARIO, CANADA	
CHECKED	APPROVED	DRAWING NO. D3053	REV. A SHEET 3 OF 3
DATE 01.11.01		TITLE BASKET BASE ASSEMBLY (212)	SCALE 1:8

RELEASED 01.12.20

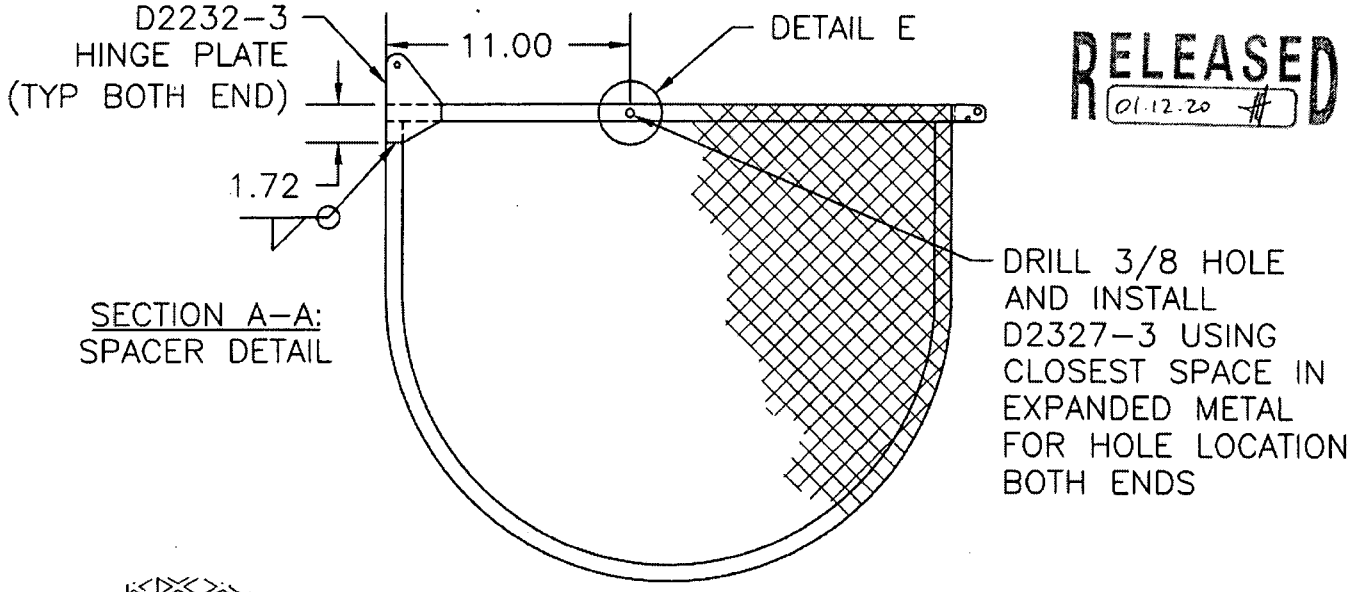

SECTION A-A:
SPACER DETAIL

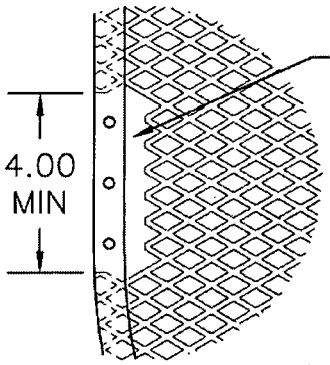

CUT AWAY EXPANDED METAL TO NEAREST INTERSECTIONS AS SHOWN SECTION D-D ONLY

DETAIL F
NOT TO SCALE

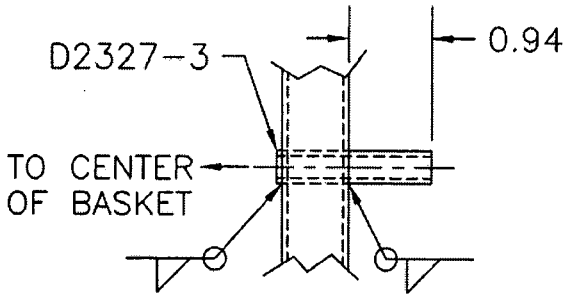

DETAIL E

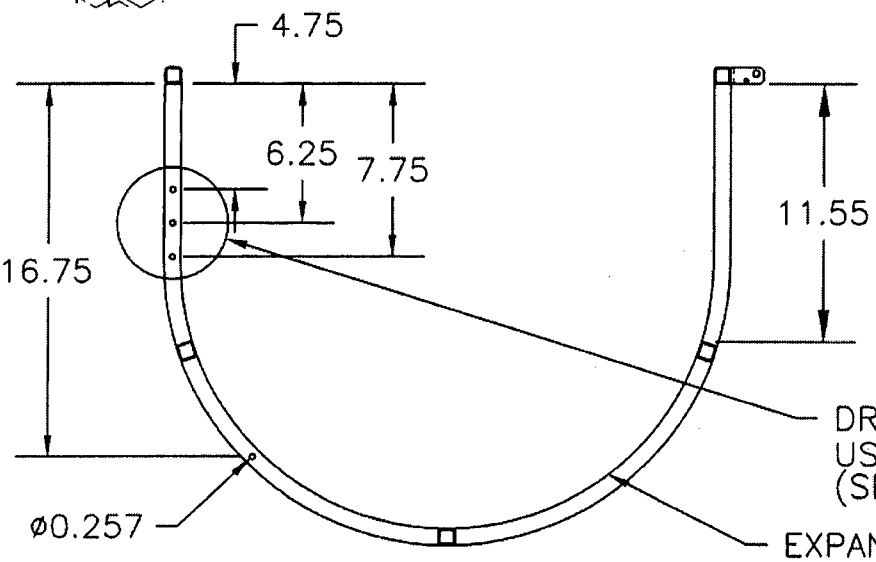

SHOP COPY
RETURN TO
ENGINEERING
UNCONTROLLED COPY
SUBJECT TO AMENDMENT
WITHOUT NOTICE
WORK ORDER 2851 B

SECTION B-B,
SECTION C-C AND
SECTION D-D:
RIB DETAIL

Copyright © 2001 by DART AEROSPACE LTD

THIS DOCUMENT IS PRIVATE AND CONFIDENTIAL AND IS SUPPLIED ON THE EXPRESS CONDITION THAT IT IS NOT TO BE USED FOR ANY PURPOSE OR COPIED OR COMMUNICATED TO ANY OTHER PERSON WITHOUT WRITTEN PERMISSION FROM DART AEROSPACE LTD.

DESIGN	DRAWN BY	DART AEROSPACE LTD VICTORIA INTERNATIONAL AIRPORT, CANADA	
B WILLIAMS	B WILLIAMS		
CHECKED	APPROVED	DRAWING NO.	REV. B
		D2235	SHEET 1 OF 1
DATE		TITLE	SCALE
94:12:16		BASKET RIBS	
B1	02.08.06	CAN BE MADE FROM D3166-1	

RELEASED 960507

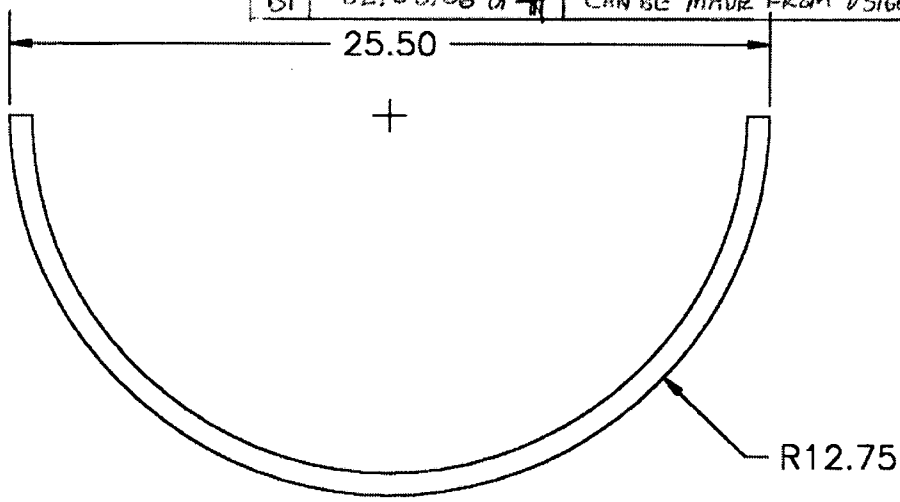

D2235–1

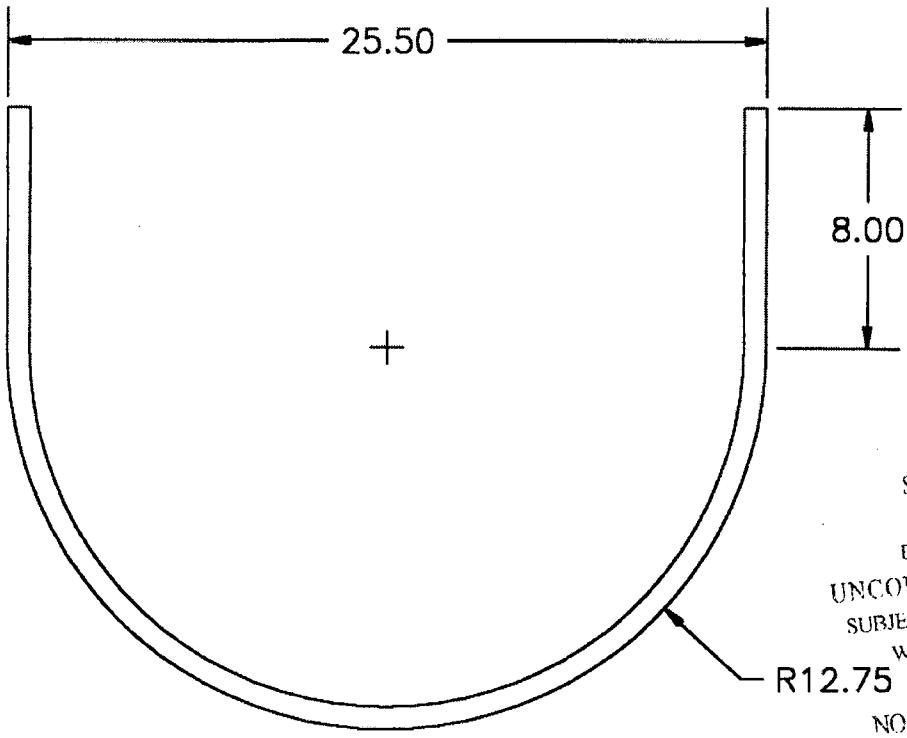

D2235–3

SHOP COPY
RETURN TO
ENGINEERING
UNCONTROLLED COPY
SUBJECT TO AMENDMENT
WITHOUT NOTICE
WORK ORDER
NO. 28511B

CAN BE MADE FROM D3166-1 B1

MATERIAL: 304/316 SS, 3/4 X 3/4 X 0.063 WALL SQR.

Copyright 1994 by DART AEROSPACE LTD

Date: Wednesday, 9/13/2006 4:24:58 PM
User: Kim Johnston

Process Sheet

Customer	: CU-DAR001 Dart Helicopters Services	Drawing Name	: 350/212/130 BASKET LID
Job Number	: 28511A		
Estimate Number	: 10193		
P.O. Number	: N/A	Part Number	: D2512
This Issue	: 9/13/2006 S.O. No. : N/A	Drawing Number	: D2512 REV D2
Prsht Rev.	: NC	Project Number	: N/A
First Issue	: N/A Type : LARGE FAB ASSY	Drawing Revision	: D2
Previous Run	: 28510A	Material	: N/A
Written By	:	Due Date	: 10/12/2006 Qty: 1 Um: Each
Checked & Approved By	: 06 09 14		

Comment : Rev Est:M 03.01.3 Added D2012-117 for D130-701-041 KJ/ RF
Est Rev:N 06.04.05 Added level21 EC

Additional Product

Job Number:

Seq. #:	Machine Or Operation:	Description :
1.0	M304TS0750W065	304 SQ Tube.75x.75x.065W

Comment: Qty.: 45.7594 f(s)/Unit Total : 45.7594 f(s)
Pick:
3/4"x3/4" 304/316 SS tube .063" wall
Batch: M102040
06/09/26

2.0	D31663	Basket Hoop

Comment: Qty.: 1.0000 Each(s)/Unit Total : 1.0000 Each(s)
Pick:

Qty	Part Number	Description	Batch
1	D3166-3	Basket Hoop	B28095

3318
06/09/26

3.0	D2506	Placard

Comment: Qty.: 1.0000 Each(s)/Unit Total : 1.0000 Each(s)
Pick:

Qty	Part Number	Description	Batch
1	D2506	Label Plate	B26631-2

06/09/26

4.0	D23271	Spacer Bushing

Comment: Qty.: 2.0000 Each(s)/Unit Total : 2.0000 Each(s)
Pick:

Qty	Part Number	Description	Batch
2	D2327-1	Bushing	B28324

06/09/26

Form: rprocess

Dart Aerospace Ltd

W/O:		WORK ORDER CHANGES					
DATE	STEP	PROCEDURE CHANGE	By	Date	Qty	Approval Chief Eng / Prod Mgr	Approval QC Inspector

Part No: _____ **PAR #:** _____ **Fault Category:** _____ **NCR:** Yes No **DQA:** _____ **Date:** _____

QA: N/C Closed: _____ **Date:** _____

NCR:		WORK ORDER NON-CONFORMANCE (NCR)						
DATE	STEP	Description of NC Section A	Corrective Action Section B			Verification Section C	Approval Chief Eng	Approval QC Inspector
			Initial Chief Eng	Action Description Chief Eng	Sign & Date			

NOTE: Date & initial all entries

Date: Wednesday, 9/13/2006 4:24:58 PM
User: Kim Johnston

Process Sheet

Customer: CU-DAR001 Dart Helicopters Services **Drawing Name:** 350/212/130 BASKET LID

Job Number: 28511A **Part Number:** D2512

Job Number:

Seq. #:	Machine Or Operation:	Description :
5.0	D22321	Hinge

Comment: Qty.: 2.0000 Each(s)/Unit Total : 2.0000 Each(s)
Pick:

Qty	Part Number	Description	Batch
2	D2232-1	Hinge plate	B25238

06/09/26

6.0	D2581	Mounting Bracket

Comment: Qty.: 2.0000 Each(s)/Unit Total : 2.0000 Each(s)
Pick:

Qty	Part Number	Description	Batch
2	D2581	Mounting Bracket	B27587

06/09/26

7.0	M304EX07516F	Expanded Metal Flat Stai

Comment: Qty.: 18.0000 sf(s)/Unit Total : 18.0000 sf(s)
Pick:

Qty	Part Number	Description	Batch
18 sf	M304EX0.75-16F	Expanded Metal ~~M101275~~	M102126

06/09/28

8.0	LARGE FAB 1	LARGE FABRICATION RESOURCE 1

Comment: LARGE FABRICATION RESOURCE 1

1-Cut 3/4" x 3/4" square tubing as per Dwg D2512

2-Cut (4) D2236 From D3166-3

3-Drill holes in D2512-1 as per Dwg D2512 using Drill Jig DT8305

5-Weld as per Dwg D2512 using Welding Table and corner Jig Deburr as required

06/09/28

9.0	QC9/6	DDIMENSIONAL & WELDING INSPECTION

Comment: DDIMENSIONAL & WELDING INSPECTION

PD 06-09-28 (1)

Form: rprocess

Dart Aerospace Ltd

W/O:		WORK ORDER CHANGES					
DATE	STEP	PROCEDURE CHANGE	By	Date	Qty	Approval Chief Eng / Prod Mgr	Approval QC Inspector

Part No: _____ **PAR #:** _____ **Fault Category:** _____ **NCR:** Yes (No) **DQA:** [signature] **Date:** 06/08/11

QA: N/C Closed: _____ **Date:** _____

NCR:		WORK ORDER NON-CONFORMANCE (NCR)						
DATE	STEP	Description of NC Section A	Corrective Action Section B			Verification Section C	Approval Chief Eng	Approval QC Inspector
			Initial Chief Eng	Action Description Chief Eng	Sign & Date			

NOTE: Date & initial all entries

Date: Wednesday, 9/13/2006 4:24:58 PM
User: Kim Johnston

Process Sheet

Customer: CU-DAR001 Dart Helicopters Services **Drawing Name:** 350/212/130 BASKET LID

Job Number: 28511A **Part Number:** D2512

Job Number:

Seq. #:	Machine Or Operation:	Description :
10.0	POWDER COATING	POWDER COATING
	Comment: POWDER COATING Powder Coat White Gloss (Ref: 4.3.5.1) as per QSI 005 4.3	06/10/03 X1
11.0	HAND FINISHING1	HAND FINISHING RESOURCE #1
	Comment: HAND FINISHING RESOURCE #1 Wing Walk and Spray Paint black as per Dwg D2512 and QSI 005 4.4	M62 078 Batch: ~~M14384~~ am 06-10-04
12.0	QC3	INSPECT POWDER COAT/CHEMICAL CONVERSION
	Comment: INSPECT POWDER COAT/CHEMICAL CONVERSION	SAD 06/10/08
13.0	PACKAGING 1	PACKAGING RESOURCE #1
	Comment: PACKAGING RESOURCE #1 Identify and Stock Location: GA	SB 06/10/08 1
14.0	QC21	FINAL INSPECTION/W/O RELEASE
	Comment: FINAL INSPECTION/W/O RELEASE	06/09/11 1

Job Completion

CL 06-10-11

Form: rprocess

Dart Aerospace Ltd

W/O:		WORK ORDER CHANGES					
DATE	STEP	PROCEDURE CHANGE	By	Date	Qty	Approval Chief Eng / Prod Mgr	Approval QC Inspector

Part No: _____ **PAR #:** _____ **Fault Category:** _____ **NCR:** Yes No **DQA:** _____ **Date:** _____

QA: N/C Closed: _____ **Date:** _____

NCR:		WORK ORDER NON-CONFORMANCE (NCR)						
DATE	STEP	Description of NC Section A	Corrective Action Section B			Verification Section C	Approval Chief Eng	Approval QC Inspector
			Initial Chief Eng	Action Description Chief Eng	Sign & Date			

NOTE: Date & initial all entries

DESIGN	DRAWN BY	DART AEROSPACE LTD HAWKESBURY, ONTARIO, CANADA
BW	CP	
CHECKED	APPROVED	DRAWING NO. D2512 — REV. D — SHEET 1 OF 4
DATE 01.04.19		TITLE BASKET LID ASSEMBLY (350/212) — SCALE NTS

DART

CA COPY ISSUED

RELEASED 01.04.27

A	95.11.21	NEW ISSUE
B	96.05.24	ADDED LATCH CHANNEL & LABEL PLATE
C	99.07.06	REMOVE DOUBLE SKIN SECTION, ADDED MEMBERS, INCORP. DEO 9074
D	01.04.19	CHANGE HINGE
D1	CP 03.01.20	ADD D2012-117 FOR D130-701-041
D2	CP 04.09.20	TACK WELD ANT-SKID AREA

PARTS LIST FOR D2512 BASKET LID ASSEMBLY

PART NO	QUANTITY	LENGTH A	LENGTH B	DESCRIPTION
D2512-1	2	—	25.50	RIB
D2512-3	2	—	95.30	RIB
D2512-5	6	30.84	—	RIB
D2512-7	3	30.63	—	RIB
D2232-1	2	N/A	N/A	HINGE PLATE
D2236	4	N/A	N/A	RIB
D2327-1	2	N/A	N/A	BUSHING
D2506	1	N/A	N/A	LABEL PLATE
D2581	2	N/A	N/A	MOUNTING BRKT

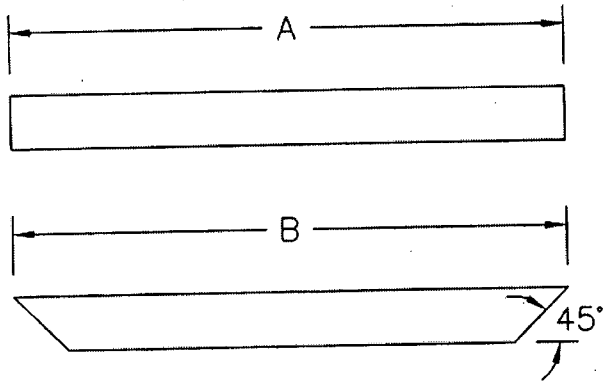

SHOP COPY
RETURN TO
ENGINEERING
UNCONTROLLED COPY
SUBJECT TO AMENDMENT
WITHOUT NOTICE
WORK ORDER
NO. 28511A

D2512-1/-3/-5/-7
CUT LENGTH/SHAPE PER DIAGRAM AND PARTS LIST
MATERIAL: AISI 304/316 SS, 3/4 X 3/4 X 0.060 WALL SQUARE TUBING
TOLERANCES ARE PER DART QSI 018 UNLESS OTHERWISE NOTED
ALL DIMENSIONS ARE IN INCHES

Copyright © 1995 by DART AEROSPACE LTD
THIS DOCUMENT IS PRIVATE AND CONFIDENTIAL AND IS SUPPLIED ON THE EXPRESS CONDITION THAT IT IS NOT TO BE USED FOR ANY PURPOSE OR COPIED OR COMMUNICATED TO ANY OTHER PERSON WITHOUT WRITTEN PERMISSION FROM DART AEROSPACE LTD.

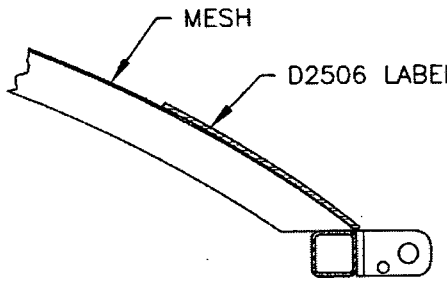

SECTION A–A
(ROTATED 90° CCW)

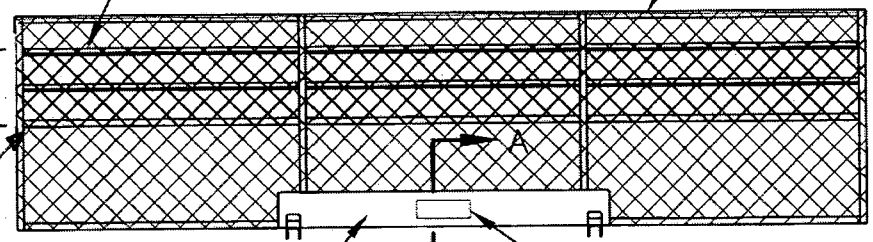

D2 TACK WELD MESH TO FRAME AT EVERY AVAILABLE LOCATION IN AREA TO BE ANTI-SKIDDED

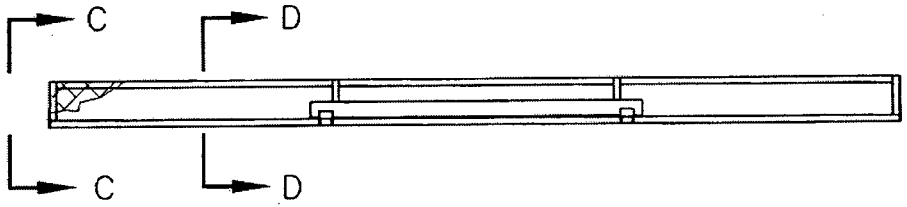

SHOP COPY
RETURN TO
ENGINEERING
UNCONTROLLED COPY
SUBJECT TO AMENDMENT
WITHOUT NOTICE
WORK ORDER
NO. 28511A

RELEASED
01.04.23

D2512 BASKET LID ASSEMBLY

1) MESH MATERIAL: 3/4–16F EXPANDED SS
2) FINISH: POWDER COAT ENTIRE ASSEMBLY WHITE (4.3.5.2) PER DART QSI 005 4.3
3) SPRAY PAINT BLACK INSIDE SURFACE
   APPLY BLACK ANTI-SKID TO OUTSIDE SURFACE PER DART QSI 005 4.4
4) TOLERANCES ARE PER DART QSI 018 UNLESS OTHERWISE NOTED
5) ALL DIMENSIONS ARE IN INCHES

DART

QA COPY IS USED

DESIGN	DRAWN BY	DART AEROSPACE LTD HAWKESBURY, ONTARIO, CANADA	
BW			
CHECKED	APPROVED	DRAWING NO. D2512	REV. D
			SHEET 2 OF 4
DATE 01.04.19		TITLE BASKET LID ASSEMBLY (350/212)	SCALE 1:20

Copyright © 1995 by DART AEROSPACE LTD
THIS DOCUMENT IS PRIVATE AND CONFIDENTIAL AND IS SUPPLIED ON THE EXPRESS CONDITION THAT IT IS NOT TO BE USED FOR ANY PURPOSE OR COPIED OR COMMUNICATED TO ANY OTHER PERSON WITHOUT WRITTEN PERMISSION FROM DART AEROSPACE LTD.

DESIGN	DRAWN BY	DART AEROSPACE LTD HAWKESBURY, ONTARIO, CANADA	
BW	UP		
CHECKED	APPROVED	DRAWING NO.	REV. D
		D2512	SHEET 3 OF 4
DATE		TITLE	SCALE
01.04.19		BASKET LID ASSEMBLY (350/212)	1:20

DART

A COPY ISSUED

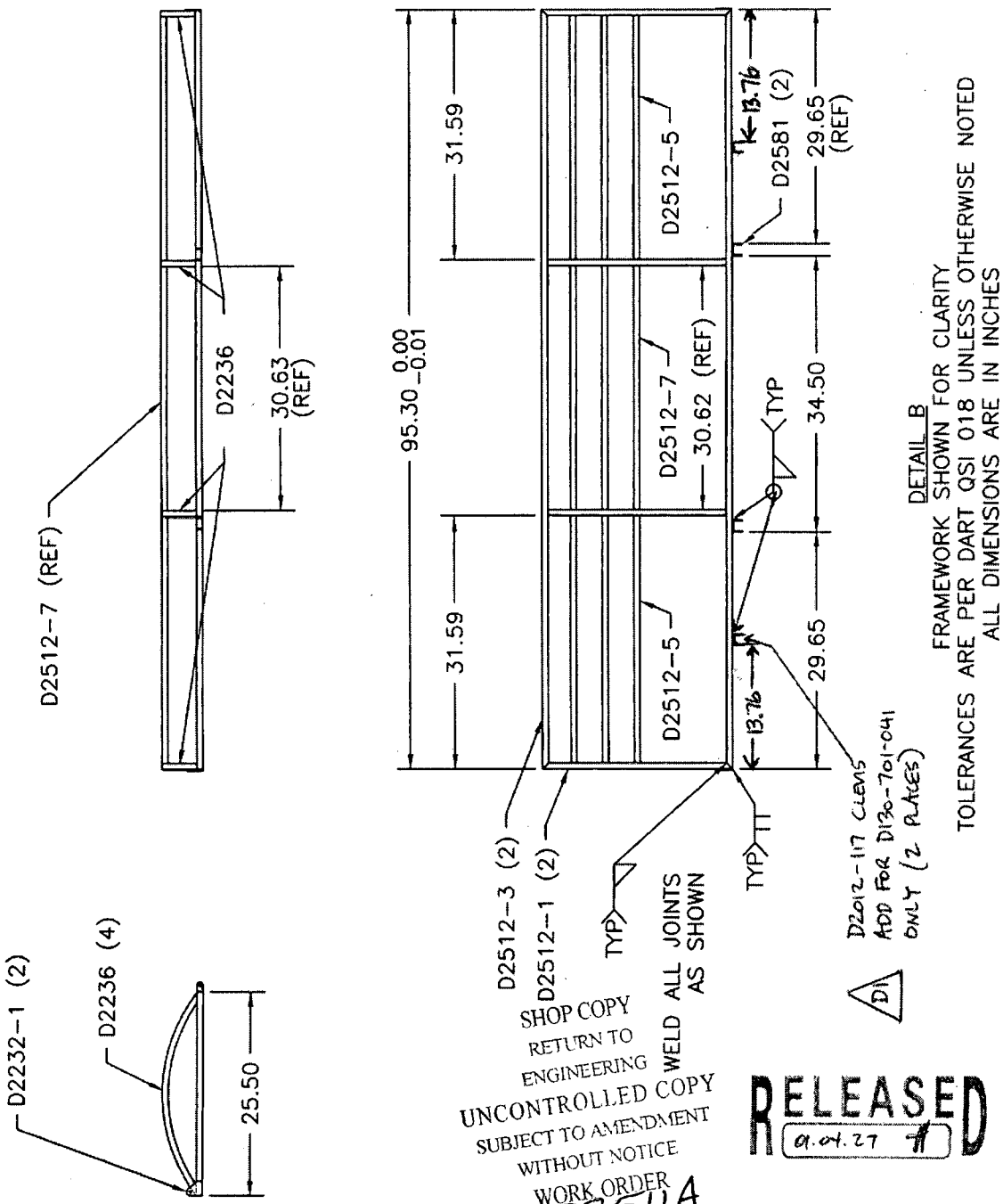

SHOP COPY
RETURN TO
ENGINEERING
UNCONTROLLED COPY
SUBJECT TO AMENDMENT
WITHOUT NOTICE
WORK ORDER
NO. 28511A

RELEASED
01.04.27

Copyright © 1995 by DART AEROSPACE LTD

THIS DOCUMENT IS PRIVATE AND CONFIDENTIAL AND IS SUPPLIED ON THE EXPRESS CONDITION THAT IT IS NOT TO BE USED FOR ANY PURPOSE OR COPIED OR COMMUNICATED TO ANY OTHER PERSON WITHOUT WRITTEN PERMISSION FROM DART AEROSPACE LTD.

DESIGN	DRAWN BY	DART AEROSPACE LTD HAWKESBURY, ONTARIO, CANADA	
BW	CP		
CHECKED	APPROVED	DRAWING NO.	REV. D
		D2512	SHEET 4 OF 4
DATE		TITLE	SCALE
01.04.19		BASKET LID ASSEMBLY (350/212)	1:8

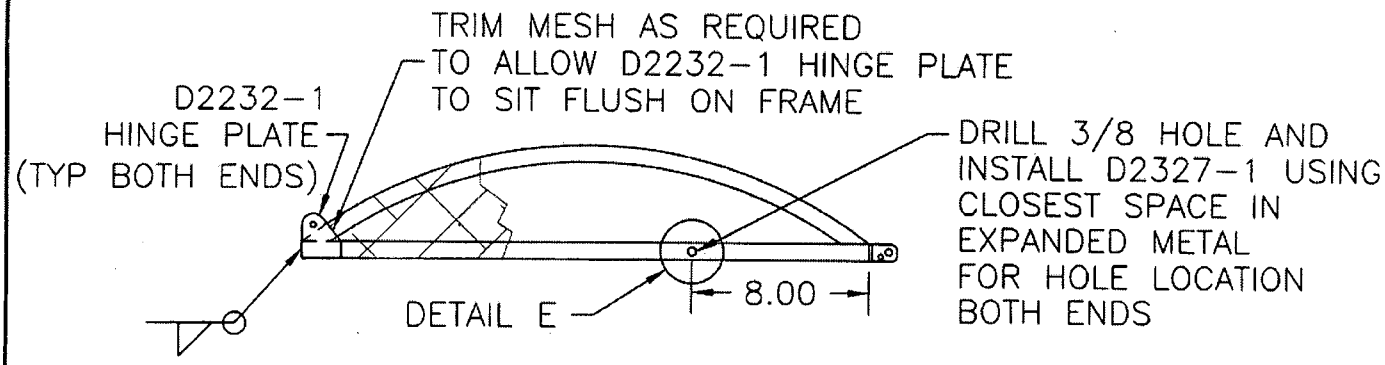

SECTION C-C SIMILIAR BOTH END RIBS

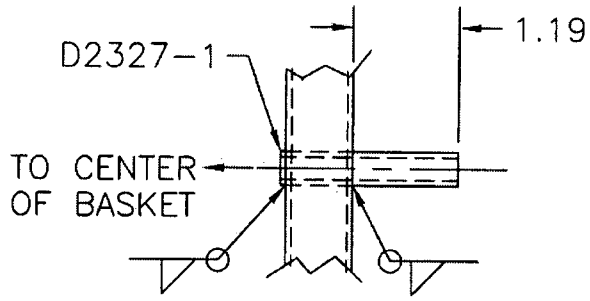

DETAIL E

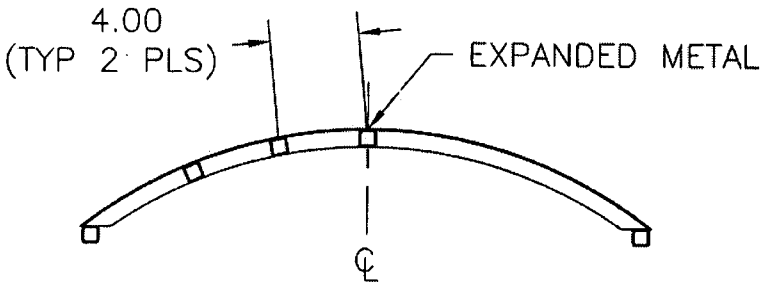

SECTION D-D SAME BOTH CENTER RIBS

SHOP COPY
RETURN TO
ENGINEERING
UNCONTROLLED COPY
SUBJECT TO AMENDMENT
WITHOUT NOTICE
WORK ORDER
NO. 28511A
RELEASED
01.04.27

Copyright © 1995 by DART AEROSPACE LTD
THIS DOCUMENT IS PRIVATE AND CONFIDENTIAL AND IS SUPPLIED ON THE EXPRESS CONDITION THAT IT IS NOT TO BE USED FOR ANY PURPOSE OR COPIED OR COMMUNICATED TO ANY OTHER PERSON WITHOUT WRITTEN PERMISSION FROM DART AEROSPACE LTD.

Dart Aerospace Ltd.

Date: Friday, 20/10/2006 1:31:58 PM
User: Linda Lacelle

Process Sheet

Customer	: CC-DAR01 Dart Aerospace Ltd.	**Drawing Name**	: D205-541
Job Number	: 29091		
Estimate Number	: 10804		
P.O. Number	: N/A	**Part Number**	: Z_CUSTOM
This Issue	: 20/10/2006 **S.O. No.** : N/A	**Drawing Number**	: UPDATE PAPERWORK
Prsht Rev.	: NC	**Project Number**	: N/A
First Issue	: N/A **Type** : OVERHEAD	**Drawing Revision**	: N/A
Previous Run	: 00015	**Material**	: N/A
Written By	:	**Due Date**	: 27/10/2006 **Qty:** 1 **Um:** Each
Checked & Approved By	:		
Comment	:		

Additional Product

Job Number:

Seq. #:	**Machine Or Operation:**	**Description :**
1.0	PACKAGING 1	PACKAGING RESOURCE #1

Comment: PACKAGING RESOURCE #1
REMOVE FINISHED GOOD FROM STOCK:
D205-541-044 B 28511, 28510

ADD NEW PAPERWORK TO KITS IN STK
EASA STC EASA.IM.R.S01242

06/10/25 (2)

2.0	PACKAGING 1	PACKAGING RESOURCE #1

Comment: PACKAGING RESOURCE #1
REPACKAGE PER PPP

N/A

3.0	QC21	FINAL INSPECTION/W/O RELEASE

(2)

Comment: FINAL INSPECTION/W/O RELEASE

06/10/26

Job Completion

06.10.26

Form: rprocess